NATURE'S HEAD® Composting Toilet

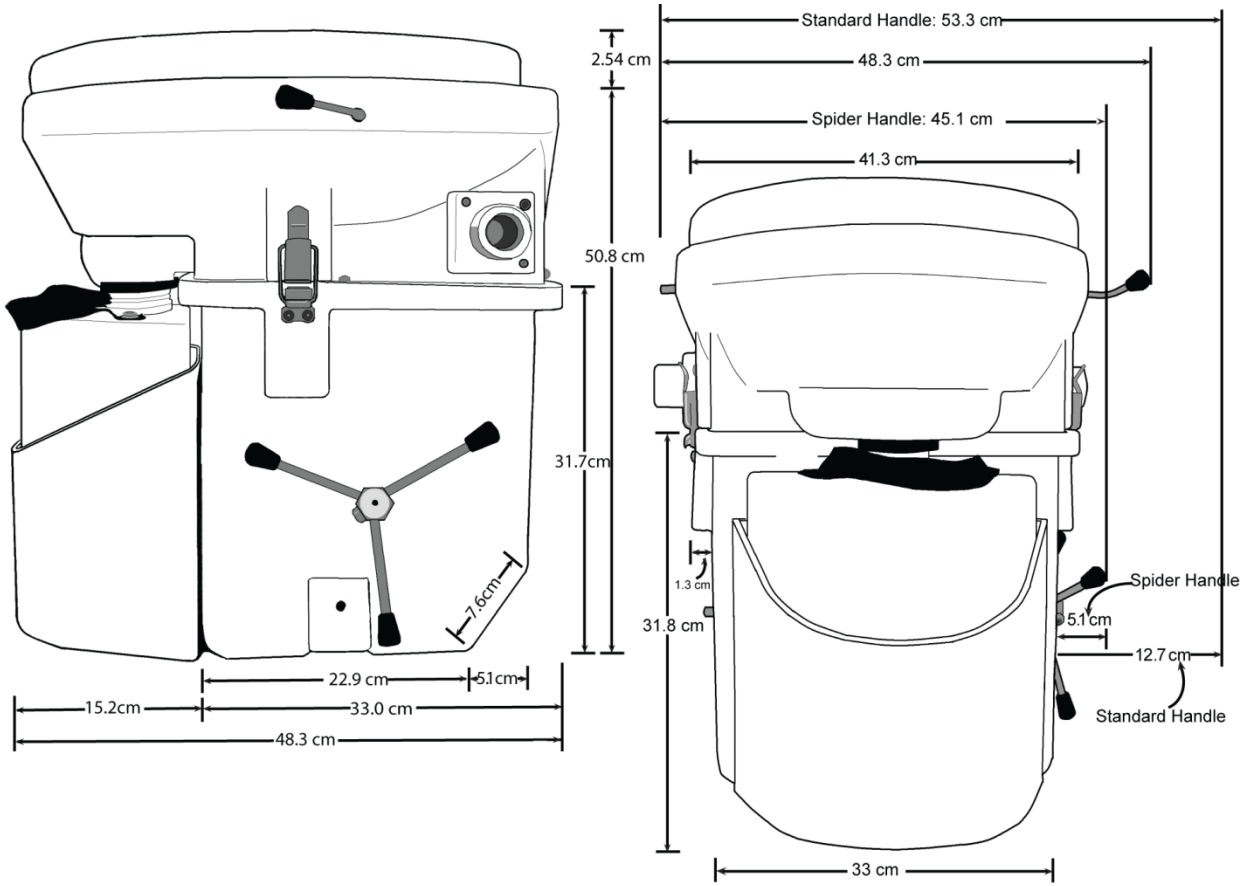

Note:

Dimensions can vary up to 4% due to the rotational molding of polyethylene plastic.

Please note as stated in our instructions the following.

- Allow approximately 3.8 centimeters behind toilet if against a bulkhead or wall for the bowl to tilt for servicing.
- To disengage the bowl from the base the bowl, face the toilet. The bowl slides to the left 5.1 centimeters to disconnect from the slip hinge
- Handle and agitator, as well as the fan housing, can be switched to either side.

©2015 Nature's Head, Inc.